IFSQUARE AFRICA

ENABLE THE MACHINE TO UNDERSTAND THE RESOURCE

THE BEST NUT X-RAY & SORTING TECHNOLOGY

IFSQUARE AFRICA (PTY) LTD

A REGISTERED DISTRIBUTOR FOR IFSQUARE INDUSTRIAL TECHNOLOGY CO., LTD

Address

14 Suikerriet Street, 25B Labserve Ave,
Nebo Park, Mbombela, 1200

Contact

info@ifsquareafrica.com | 071 676 7659
tobie@ifsquareafrica.com | 072 857 7756

Website

www.ifsquareafrica.com

Distributor in Botswana, Malawi, Mozambique, South Africa, Swaziland, Zambia, USA and Zimbabwe.

Scan to visit our website

Follow us on social media

Ifsquare Africa

IFSQUARE AFRICA

Company Registration Nr: 2022/655422/07



ENABLE THE MACHINE UNDERSTAND THE RESOURCE

RESOURCE

ENABLE THE MACHINE
UNDERSTAND THE RESOURCE.



UNDERSTAND MATERIALS

Through intelligent identification and data analysis, we evaluate quality, grade, and characteristics with precision—making sorting more scientific, efficient, and value-driven.



UNDERSTAND TIME

With high-speed processing and intelligent decision-making, our systems reduce sorting cycles, optimize production flow, and enable higher output within the same timeframe.



UNDERSTAND SPACE

By optimizing machine structure and process design, we help customers maximize limited space, streamline operations, and achieve better efficiency with lower cost.

Since

2019

Ifsquare Industrial Technology, headquartered in Hangzhou, China, stands for limitless possibility and a spirit of open exploration. We believe the future of agriculture is built by unlocking new possibilities through technology.

Driven by our mission to enable machines to understand resources, we see manufacturing not as an end, but as a bridge between innovation and agricultural production. Beyond sorting equipment, we are expanding across quality inspection, intelligent sorting, and agricultural robotics, bringing smarter and more efficient solutions to modern agriculture.

Since its founding, Ifsquare has remained focused on agricultural product quality inspection, building a high end, platform based technology system powered by automation and intelligence. Our solutions are trusted by customers across multiple countries and regions, and we have established a leading position in internal nut sorting.

Looking ahead, Ifsquare aims not only to build advanced machines, but to help define the future of agriculture. By connecting inspection, sorting, robotics, and intelligent automation into one integrated system, we are working toward a more autonomous, intelligent, and efficient agricultural value chain.

Ifsquare's intelligent sorting solutions cover major global nut producing regions, with up to 70 percent market share. Partnering with leading nut and agricultural companies worldwide, we continue to drive the industry toward greater intelligence and efficiency.

CORE MARKET SHARE

70%

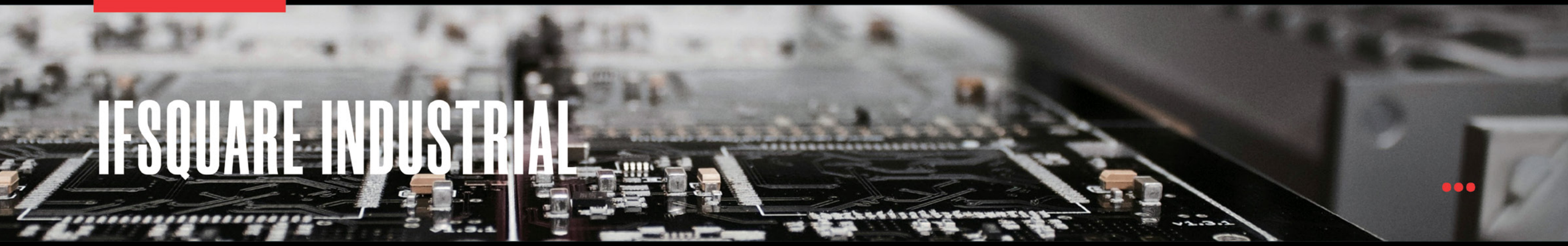

IFSQUARE INDUSTRIAL

DMAX

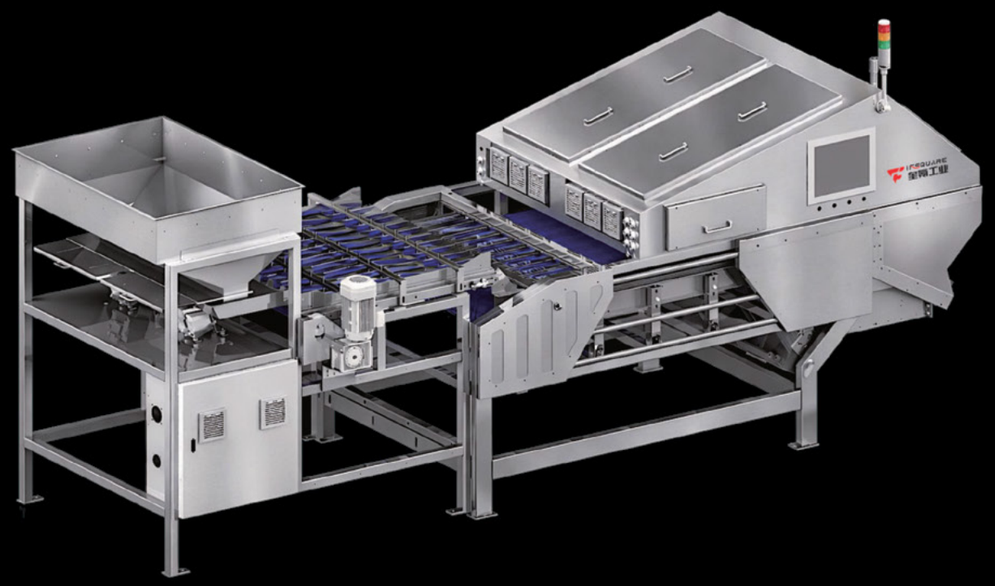

DMAX

Multichannel Optical Sorter

The DMAX multichannel optical sorter is built on a high-speed detection system and multichannel architecture, focusing on surface defect detection in agricultural products. Combining multi-angle inspection, high-resolution imaging, and intelligent recognition algorithms, it accurately identifies color variations, surface defects, foreign materials, and shape irregularities.

Model	DMAX
Screen Size	17 - inch
Air Guns	150 - 180
Air Pressure	0.6 MPa
Air Consumption	1800 L / min
Power Rating	7.5 kW
Power Supply	220 V AC；50 Hz

Machine Dimensions	Feeder Dimensions	Scanning Width	Cameras
4910 × 800× 2115 mm	900 × 700 × 700 mm	600 mm	2 - 5
4910 × 1400× 2115 mm	900 × 1300 × 700 mm	1200 mm	4 - 10
4910 × 2000× 2115 mm	900 × 1900 × 700 mm	1800 mm	6 - 15
4910 × 2600× 2115 mm	900 × 2500 × 700 mm	2400 mm	8 - 20

01

FULL-VIEW INSPECTION

Multi-angle inspection with 360° coverage and 8 - 20 high-resolution cameras for accurate surface defect detection.

02

MULTICHANNEL EFFICIENCY

10 - 20 configurable channels enable parallel processing and higher throughput in complex sorting tasks.

03

HIGH-SPEED OPERATION

Conveying speeds of 2.5 – 3 m/s support efficient processing with reliable performance in continuous operation.

04

FLEXIBLE CLASSIFICATION

Supports 4-class sorting for flexible classification and more consistent results across different product types.

SPECIFICATIONS

High-throughput Processing and Capacity Optimization

With a multi-channel parallel architecture
the DMAX optical sorter increases processing capacity per unit time
It delivers stable throughput in complex sorting scenarios
making it a key configuration for improving overall efficiency

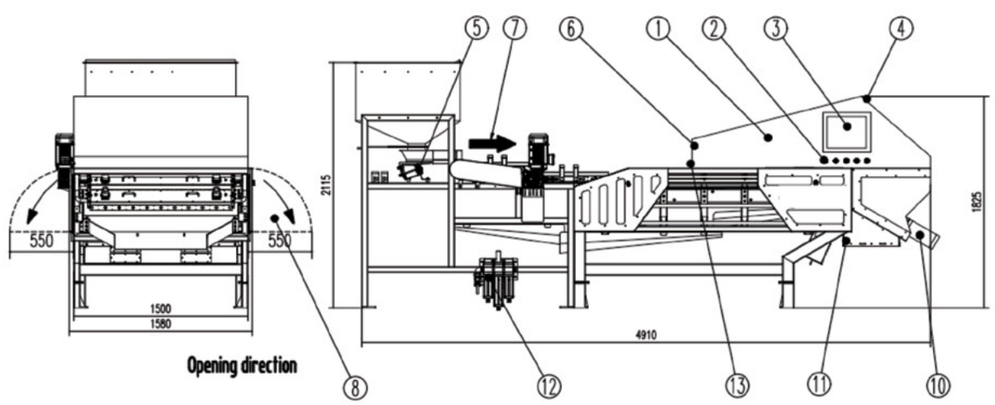

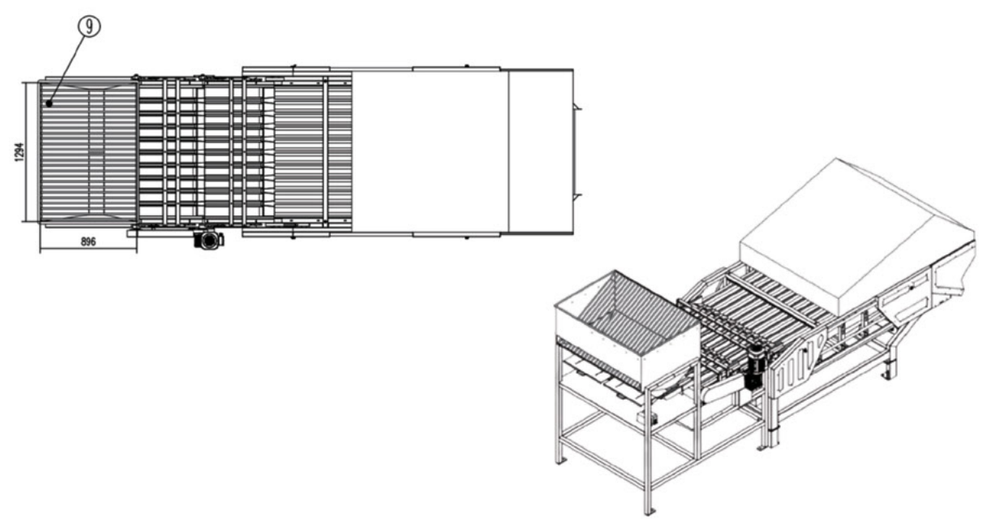

1 Color Sorter System

2 Control Units

3 Touch LCD Display

4 Signal Tower Red / Yellow / Green

5 Conveyor Belt

6 Blower Fan

7 Conveying Direction

8 Door Opening

9 Infeed Port

10 Accept Outlet 400 / 800 / 1200 / 1600 mm (W)

11 Reject Outlet 650 / 1300 / 1950 / 2600 mm (W)

12 Inlet Airpipe DN25 G1

Intake Pressure 0.4 - 0.6 MPa

13 Power Rating 7.5 kW

Power Supply 220 V, 34 A

Model	Capacity	Scan Width	Sensor Configuration	Sorting Accuracy
DMAX	2 -10 t / h (Varies by configuration)	600 - 2400 mm	RGB Optical Cameras	0.125 - 0.5 mm

Model	Frequency	Algorithm	Material	Operating Environment
DMAX	500 Hz 1 mm Interval	✓ Traditional ✓ Deep Learning	SUS 304 (3mm Thinckness)	✓ -10 - 40 °C ✓ AC IP55

DMAX T



DMAX T

Multi-channel Optical Sorter

Designed for targeted applications such as tomato processing, the DMAX T delivers reliable surface defect detection through multi-angle inspection and a multi-channel architecture. With high-resolution imaging, intelligent recognition, and a directional feeding system, it ensures accurate sorting and stable performance in continuous operation.

Model	DMAX T
Screen Size	17 - inch
Camera	4
Air Guns	80
Air Pressure	0.6 Mpa
Air Consumption	1800 L / min
Power Rating	7.5 kW
Power Supply	220 V AC； 50 Hz
Machine Dimensions	4560 × 1400× 2115 mm
Feeder Dimensions	900 × 1300 × 700 mm
Scanning Width	1200 mm

01

PRECISION

With 4 sets of high-resolution cameras, DMAX T captures surface features with clarity and stability. It enables accurate detection of color variations, surface defects, and localized irregularities for precise sorting.

02

STABILITY

Designed with a directional feeding system for specific product characteristics, ensuring stable flow into the inspection zone and improving consistency during continuous sorting.

03

EFFICIENCY

Operating at speeds of 2.5 - 3 m / s, DMAX T maintains a stable sorting rhythm under continuous high-load conditions, delivering both high throughput and reliable sorting performance.

04

ADAPTABILITY

Supports 2-class sorting configuration, allowing flexible setup based on product characteristics and processing requirements while ensuring accurate classification with consistent efficiency and performance.

SPECIFICATIONS

Focused Sorting with Application-Specific Optimization

The DMAX T Multichannel Optical Sorter is specifically optimized for targeted materials and processing scenarios combining tailored feeding and inspection to improve sorting efficiency and process alignment enabling more direct and efficient surface defect sorting

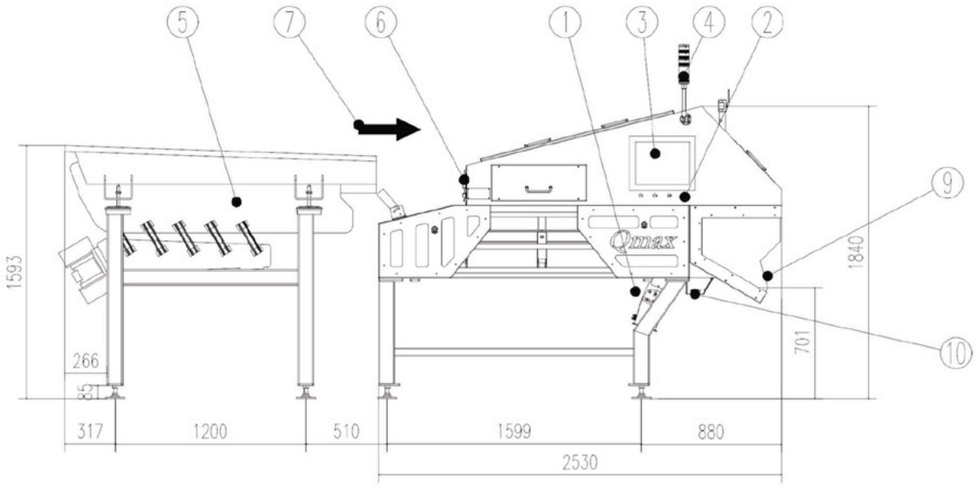

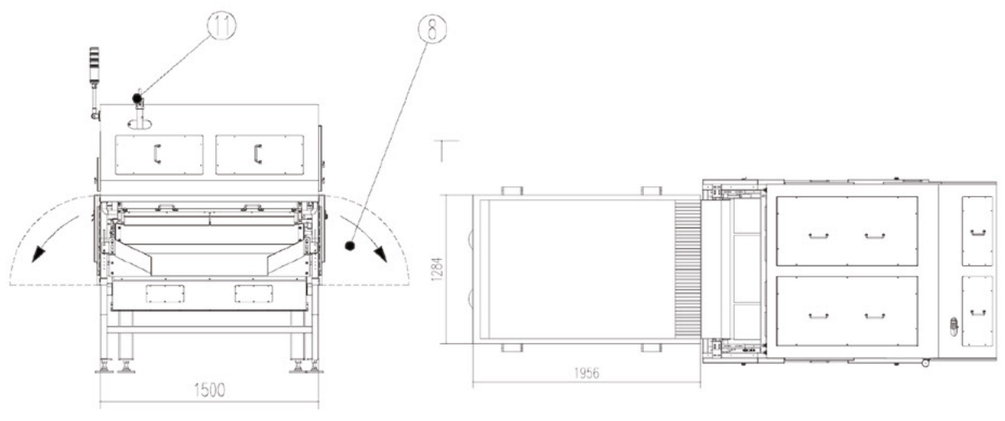

1 Color Sorter System

2 Control Units

3 Touch LCD Display

4 Signal Tower Red / Yellow / Green

5 Conveyor Belt

6 Blower Fan

7 Conveying Direction

8 Door Opening

9 Accept Outlet 800 mm (W)

10 Reject Outlet 105 × 1296 mm (W × H)

11 Inlet Airpipe DN25 G1

Intake Pressure 0.4 - 0.6 Mpa

12 Power Rating 7.5 kW

Power Supply 220 V 34 A

Model	Capacity	Scan Width	Sensor Configuration	Resolution	Conveying Speed
DMAX T	3 - 5 t / h	1200 mm	RGB Optical Cameras	0.125 - 0.5 mm	2.5 - 3 m / s

Model	Sorting Class	Algorithm	Material	Operating Environment
DMAX T	2	✓ Traditional ✓ Deep Learning	SUS 304 (3mm Thinckness)	-10 - 40 ℃

IRSQUARE

IDS



IDS

Individual Optical Sorter

The IDS Individual Optical Sorter is designed for high-end kernel processing, using single-item inspection to deliver precise sorting and grading of every product. With 360° full-coverage detection and intelligent recognition technology, it identifies color variations, surface defects, and foreign materials while maintaining stable, accurate performance under complex material conditions.

Model	IDS
Display Size	17 - inch
Air Guns	6 / 8 / 10
Machine Dimensions	6150 × 1870 × 450 mm
Feeder Dimensions	400 × 250× 300 mm
Air Pressure	0.6 Mpa
Power Supply	220 V AC；50 Hz

01

MULTICHANNEL SORTING

Supports 6 / 8 / 10 channels for flexible configuration, enabling precise classification by color, size, and defects.

02

FULL-VIEW INSPECTION

360° full-coverage inspection ensures complete detection of each item, reducing misses and improving overall inspection reliability.

03

HIGH-RESOLUTION IMAGING

High-resolution imaging captures subtle color variations and surface defects, providing a reliable visual basis for precise sorting.

04

HIGH-SPEED CONVEYING

Optimized for single-item sorting, the conveying system ensures orderly product flow and consistent detection performance at speeds of 2.5 – 3 m/s.

06

MODULAR EXPANSION

Supports flexible horizontal and vertical expansion, enabling scalable system capacity while maintaining sorting precision.

06

AI ADAPTIVE LEARNING

AI-driven learning continuously optimizes detection models, improving sorting accuracy with ongoing data accumulation.

SPECIFICATIONS

Flexible Modular Configuration

IDS Individual Optical Sorter supports horizontal and vertical modular combinations
allowing multiple units to be connected as needed
to expand capacity and build a scalable, high-precision sorting system

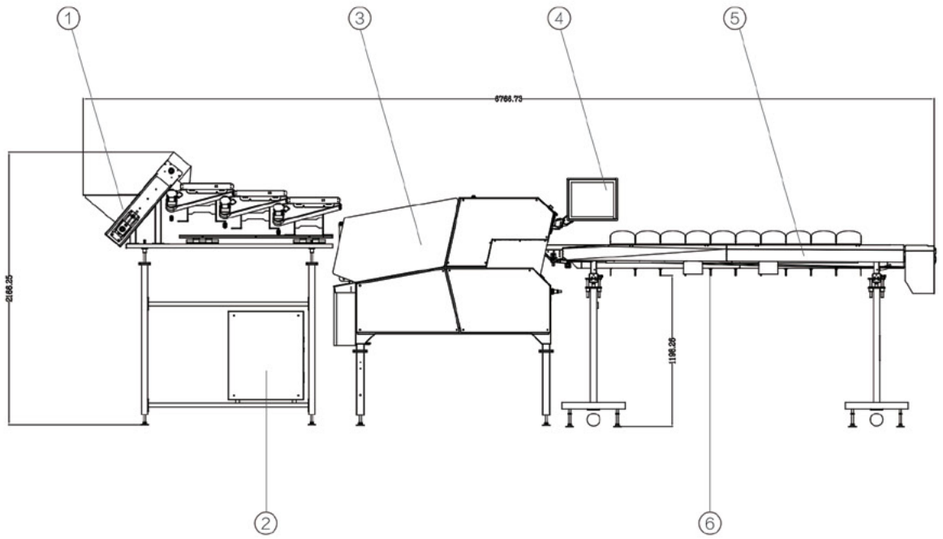

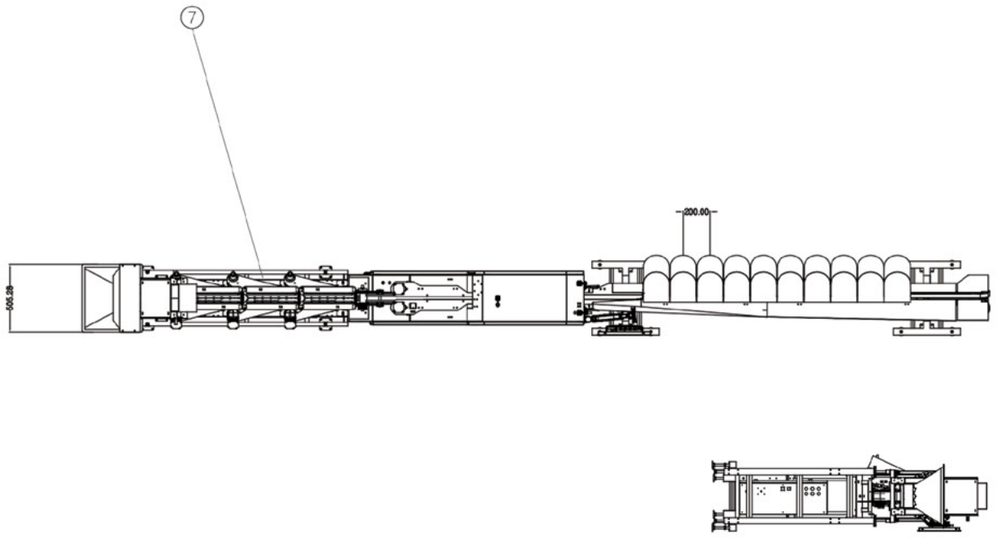

1. Infeed Port
2. Control Cabinet
3. Protective Cover
4. Touch LCD Display
5. Sorting Ejection Module
6. Sorting Discharge Outlet
7. Stabilizing Module

Model	Capacity	Scan Range	Detection System	Resolution
IDS	15 - 50 pcs / s (Varies by configuration)	30 mm	Industrial Vision Camera	10 px / mm

Model	Algorithm	Material	Operating Environment
IDS	✓ Traditional ✓ Deep Learning	SUS 304 (3mm Thinckness)	✓ -10 - 40 °C ✓ AC IP55

VALOR 8

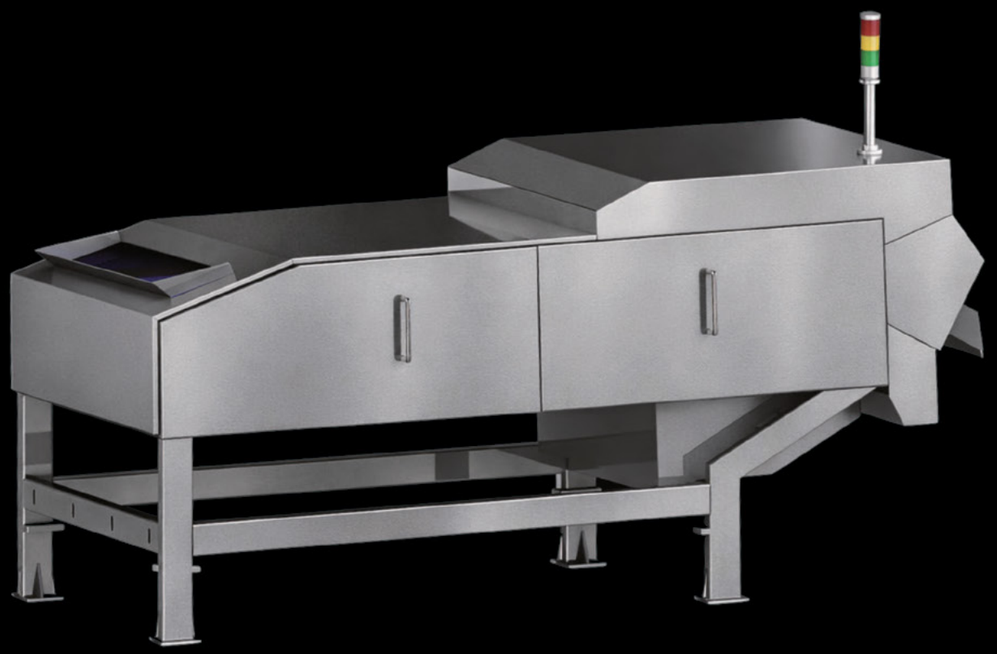

VALOR 8

X-Ray Imaging Sorter

Designed for light-material applications such as sunflower seeds, the Valor 8 combines high-resolution X-ray imaging, multi-modal detection, and intelligent algorithms to identify internal defects and surface irregularities in a single pass. It delivers stable, accurate sorting under continuous high-speed operation while maintaining both throughput and product quality.

Model	VALOR 8
X-Ray Output	320 W
X-Ray Leakage	< 0.2 uSv / h (without shielding)
Display Size	17 inch
Air Guns	50 - 75
Machine Dimensions	2880 × 2250 × 1100 mm
Feeder Dimensions	940 × 910 × 2020 mm
Air Pressure	0.4 - 0.6 MPa
Power Consumption	5.5 kW
Power Supply	220 V AC；50 Hz

01

MULTI-MODAL DETECTION

Combines X-ray inspection with dual RGB 4K imaging to detect internal defects and surface irregularities in one system.

02

LIGHT-MATERIAL OPTIMIZATION

Optimized for light materials such as sunflower seeds, improving material flow and detection consistency.

03

WIDE COVERAGE

A wide scanning width ensures broader material coverage while maintaining efficient and consistent throughput.

04

HIGH-SPEED OPERATION

Operating at a conveying speed of 1.5 – 2.5 m/s, the system remains reliable and well-balanced during continuous production.

SPECIFICATIONS

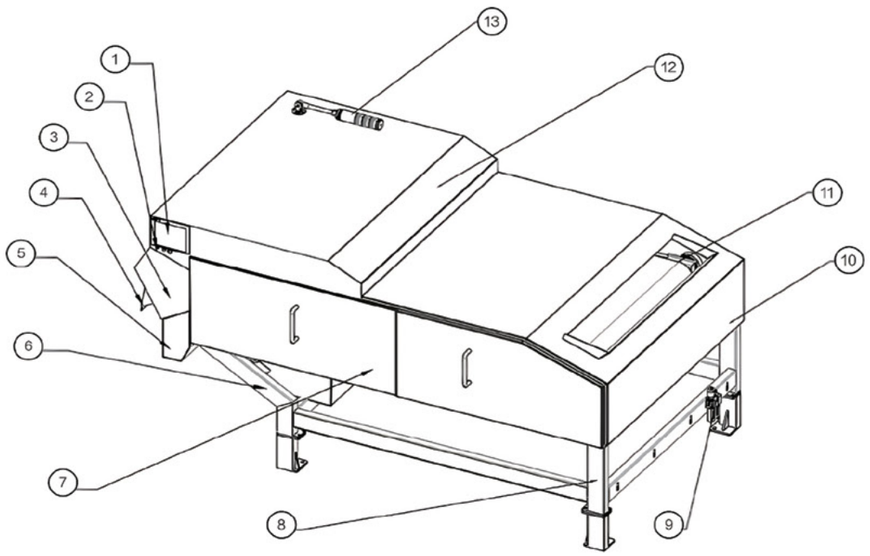

Light-Material Optimization

The Valor 8 X-ray Imaging Sorter is engineered for lightweight products with a system design optimized for controlled material flow and consistent presentation through the inspection zone helping reduce instability during processing and enabling more reliable detection of internal and surface defects

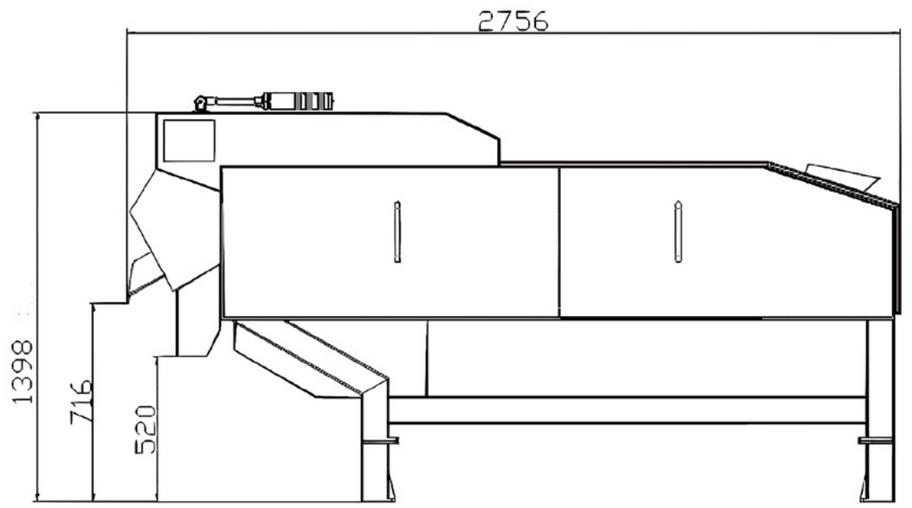

1. Discharge Outlet Protectice Cover
2. Control Components
3. Touchscreen Display
4. Discharge Outlet
5. Reject Outlet
6. X-ray Inspection Chamber
7. Door Opening
8. Frame Structure
9. Air Inlet Pressure 0.4 – 0.6 MPa
10. Upper X-ray Inspection Chamber
11. Conveyor Belt
12. Rear Safety Door
13. Signal Tower Red / Yellow / Green

Model	Sensor Configuration	Air Gun	Conveying Speed	Operating Environment
VALOR 8 600	X-Ray Camera + Dual RGB Camera	50	1 - 3 m / s	✓ -10 - 40 °C ✓ AC IP55

Model	Sensor Configuration	Air Gun	Conveying Speed	Operating Environment
VALOR 8 1200	X-Ray Camera + Dual RGB Camera	75	1 - 3 m / s	✓ -10 - 40 °C ✓ AC IP55

VALOR 5



VALOR 5

X-Ray Imaging Sorter

Valor 5 X-ray Imaging Sorter features the latest sensing and imaging system, combining high-resolution X-ray technology with dual RGB cameras for precise inspection across a wide scanning range. With superior resolution and processing power, it quickly detects defects such as mold, cracks, insect damage, and hollow shells, ensuring fast and reliable sorting performance.

Model	VALOR 5
X-Ray Output	320 W
X-Ray Leakage	< 0.2 uSv / h (without shielding)
Display Size	17 - inch
Air Guns	96
Machine Dimensions	2610 × 1100 × 2030 mm
Feeder Dimensions	700 × 700 × 300 mm
Air Pressure	0.6 MPa
Power Consumption	5.5 kW
Power Supply	220 V AC；50 Hz

01

PRECISION

Advanced high-resolution X-ray imaging precisely detects internal defects, ensuring consistent and reliable sorting performance.

02

EFFICIENCY

Ultra-fast recognition and rejection ensure high-speed, continuous performance with exceptional throughput.

03

COMPACTNESS

A space-saving design fits easily into diverse production layouts, ensuring flexible, efficient, and highly practical integration.

04

INTELLIGENCE

Cloud-based control enables real-time monitoring, data-driven insights, and adaptive optimization for stable, intelligent, and efficient operation.

SPECIFICATIONS

Excellent Production Performance

The Valor 5 X-ray Imaging Sorter delivers fast, stable operation with consistent detection and sortingeven under continuous use Its compact design and flexible layout enable efficient integration and reliable quality output in limited space.within limited space

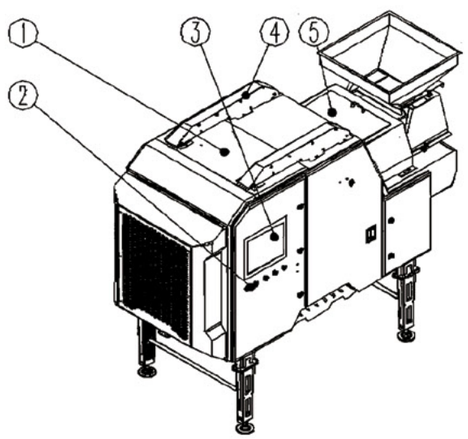

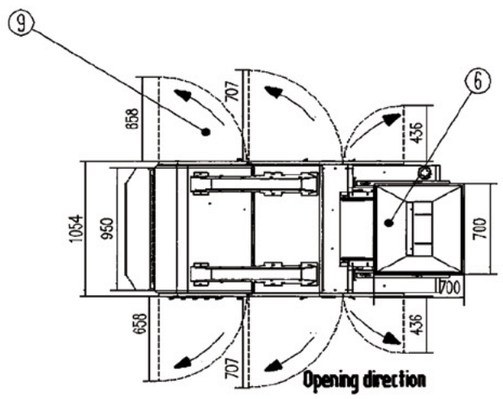

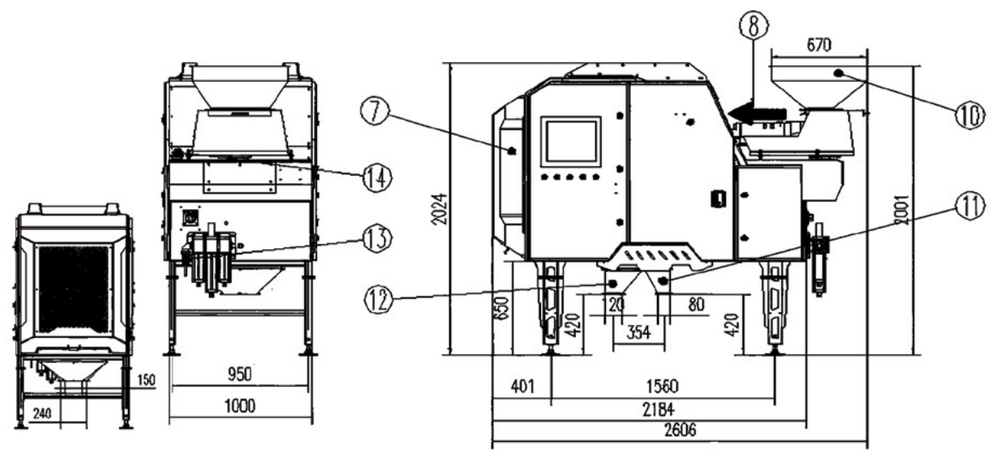

1. X-Ray System
2. Control Components
3. Touchscreen Display
4. Signal Tower Red / Yellow / Green
5. Protective Cover
6. Conveyor Belt
7. Air Conditioner
8. Conveying Direction
9. Door Opening
10. Infeed Port
11. Accept Chute 80 × 240 mm (L × W)
12. Reject Chute 120 × 150 mm (L × W)
13. Air Inlet DN25 G1 Connection
    Air Pressure 0.4 - 0.6 MPa
14. Power Consumption 6 kW
    Power Supply 220 V, 28 A

Model	Capacity	Scan Width	Detection System	Resolution	Air Gun
VALOR 5	3 - 8 t / h	460 mm	X-Ray Camera Only	X-Ray Camera 0.1 - 0.4 mm	500 - 1000 Hz Frequency
			X-Ray Camera + Dual RGB Camera	Optical Camera 0.125 - 0.5 mm	5 mm Interval

Model	Radiation Protection	Algorithm	Material	X-Ray Tube	Operating Environment
VALOR 5	✓ < 0.2 uSv / h ✓ Magnetic Shielding	✓ Traditional ✓ Deep Learning	SUS 304 (3mm Thinckness)	40 kV, 8 mA (350 W)	✓ -10 - 40 °C ✓ AC IP55

IRSQUARE

VALOR 3



VALOR 3

X-Ray Imaging Sorter

The Valor 3 X-ray Imaging Sorter is built on a proven and stable system architecture, designed for a wide range of agricultural sorting applications. Integrating high-resolution X-ray inspection with multi-sensor technology, it effectively detects internal defects and surface irregularities. While maintaining reliable sorting accuracy, it supports moderate throughput, offering a balanced solution of stability and cost-efficiency.

Model	VALOR 3
X-Ray Output	320 W
X-Ray Leakage	< 0.2 uSv / h (without shielding)
Display Size	17 - inch
Air Guns	96
Machine Dimensions	2880 × 2250 × 1100 mm
Feeder Dimensions	940 × 910 × 2020 mm
Air Pressure	0.6 MPa
Power Consumption	4.5 kW
Power Supply	220 V AC；50 Hz；5 kW

01

RELIABILITY

Built on a proven system architecture, ensuring stable and consistent sorting performance under continuous operation.

02

CONSISTENCY

Maintains reliable detection results across varying material conditions, supporting uniform and repeatable sorting outcomes.

03

ADAPTABILITY

Designed to handle a wide range of agricultural products, enabling flexible application across different processing scenarios.

04

INTELLIGENCE

Cloud-based control enables real-time monitoring, data-driven insights, and adaptive optimization for stable, intelligent, and efficient operation.

SPECIFICATIONS

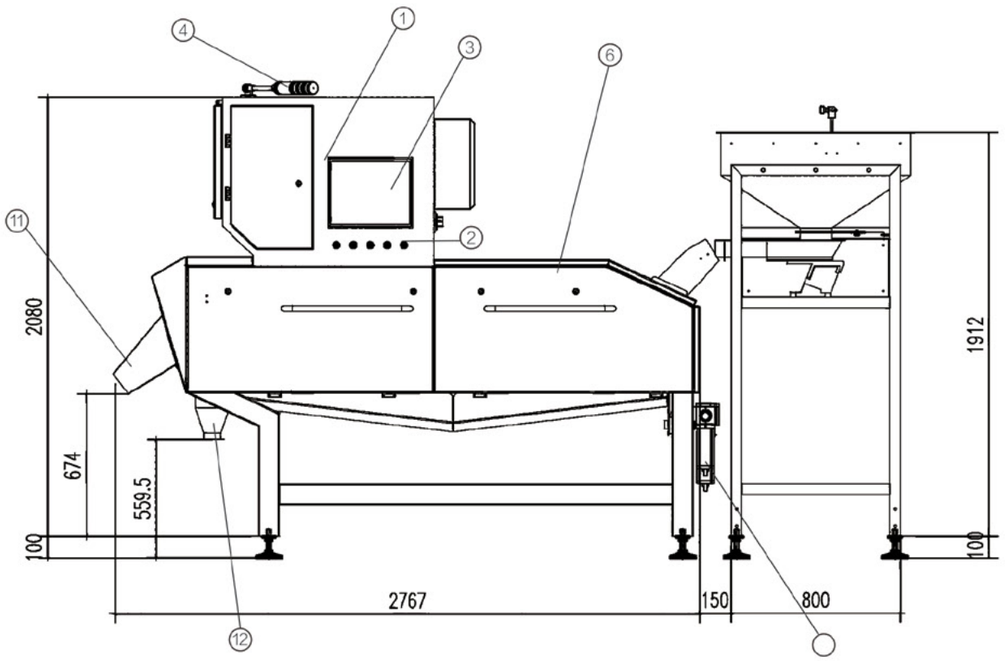

Reliable and Efficient Sorting Performance

The Valor 3 X-ray Imaging Sorter delivers stable detection and sorting under continuous operationbuilt on a proven system design. It adapts well to a variety of processing scenarios balancing sorting accuracy with consistent operational efficiency

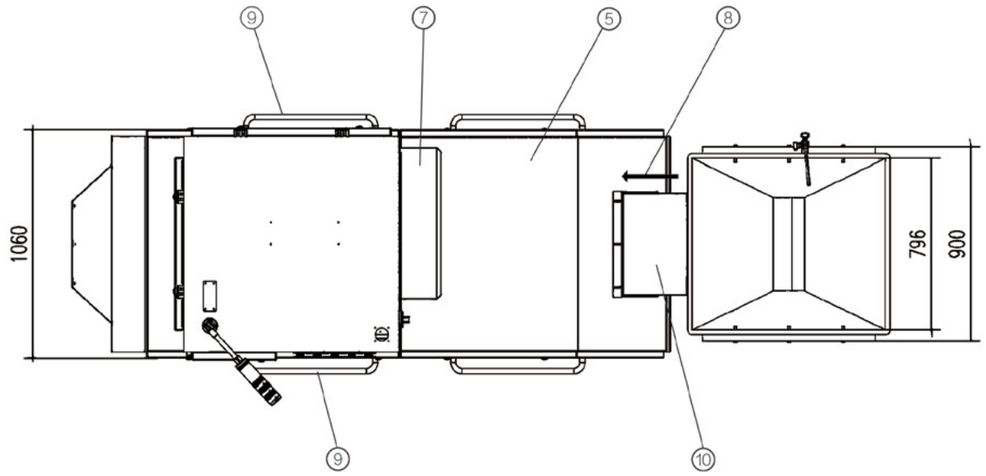

1. X-Ray System
2. Control Components
3. Touchscreen Display
4. Signal Tower Red / Yellow / Green
5. Protective Cover
6. Conveyor Belt
7. Air Conditioner
8. Conveying Direction
9. Door Opening
10. Infeed Port
11. Accept Chute 400 × 120 mm (L × W)
12. Reject Chute 450 × 80 mm (L × W)
13. Air Inlet DN25 G1 Connection
    Air Pressure 0.4 - 0.6 MPa
14. Power Consumption 6 kW
    Power Supply 220 V, 28 A

Model	Capacity	Scan Height	Scan Width	Resolution	Conveying Speed
VALOR 3	2 - 4 t / h	150 mm	460 mm	0.4 mm	0 - 120 m / min

Model	Radiation Protection	Algorithm	Material	X-Ray Tube	Operating Environment
VALOR 3	✓ < 0.2 uSv / h ✓ Magnetic Shielding	✓ Traditional ✓ Deep Learning	SUS 304 (3mm Thinckness)	40 kV, 8 mA (350 W)	✓ -10 - 40 °C ✓ AC IP55

VALOR MINI



VALOR MINI

X-Ray Imaging Sorter

The Valor Mini X-ray Imaging Sorter is designed for space-constrained and medium to small-scale production environments, delivering efficient and stable sorting in a compact footprint. With high-resolution X-ray inspection and dual RGB cameras, it detects internal defects and surface irregularities while maintaining accuracy, efficiency, and flexibility.

Model	VALOR MINI
X-Ray Output	320 W
X-Ray Leakage	< 0.2 uSv / h (without shielding)
Display Size	17 - inch
Air Guns	56
Machine Dimensions	2405 × 804 × 1882 mm
Feeder Dimensions	700 × 700 × 300 mm
Air Pressure	0.6 Mpa
Power Consumption	5.5 kW
Power Supply	220 V AC；50 Hz

01

COMPACTNESS

Compact machine layout with a smaller footprint, ideal for space-limited environments. Enables efficient installation and improves line flexibility and space utilization.

02

VERSATILITY

Combines X-ray and dual RGB cameras for synchronized detection of internal and surface defects. Accurately identifies mold, cracks, insects, and hollow shells.

03

STABILITY

Maintains stable detection and sorting accuracy during continuous operation. Delivers reliable performance across varying materials and processing conditions.

04

FLEXIBILITY

Adapts to different production line configurations and small-to-medium processing needs. Ensures precision while balancing efficiency and space utilization.

SPECIFICATIONS

Compact Design with Reliable Performance

Valor Mini Imaging Sorter delivers stable and efficient sorting performance while requiring minimal installation space
The balanced system design supports consistent throughput and high sorting precision
allowing producers to maintain productivity and quality even in compact processing areas

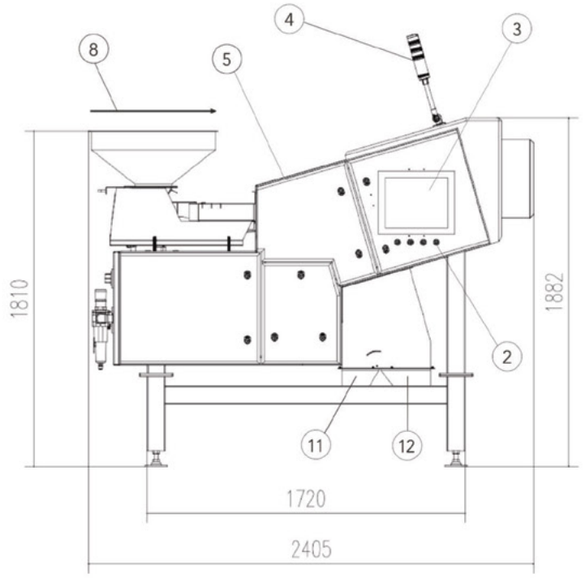

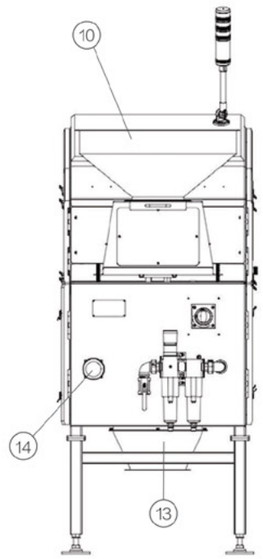

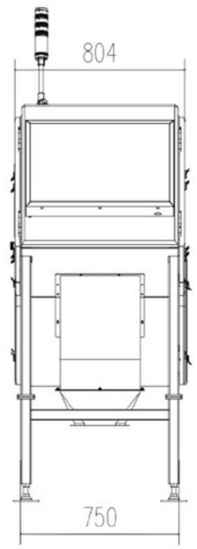

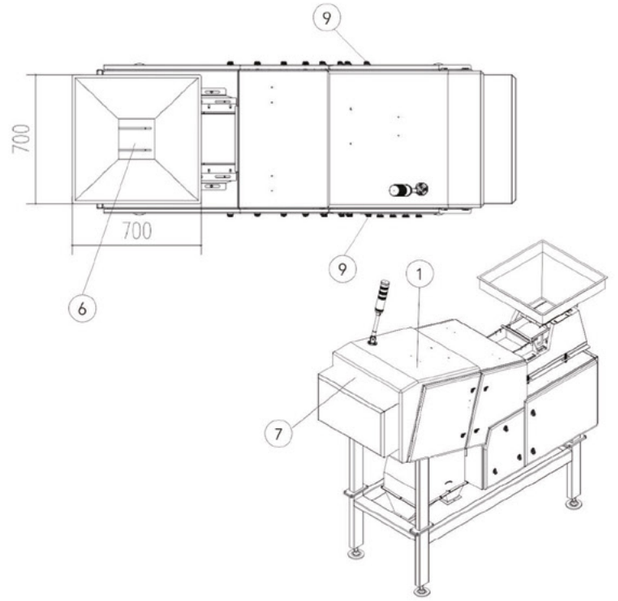

1 X-Ray System

2 Control Components

3 Touchscreen Display

4 Signal Tower Red / Yellow / Green

5 Protective Cover

6 Conveyor Belt

7 Air Conditioner

8 Conveying Direction

9 Door Opening

10 Infeed Port

11 Accept Chute 150 × 150 mm (L × W)

12 Reject Chute 110 × 240 mm (L × W)

13 Air Inlet DN25 G1 Connection
Air Pressure 0.4 - 0.6 MPa

14 Power Consumption 6 kW
Power Supply 220 V, 28 A

Model	Capacity	Scan Width	Detection System	Resolution	Air Gun
Valor Mini	1 - 2 t / h	250 mm	X-Ray Camera	0.1 - 0.4 mm	500 - 1000 Hz Frequency 5 mm Interval

Model	Radiation Protection	Algorithm	Material	X-Ray Tube	Operating Environment
Valor Mini	✓ < 0.2 uSv / h ✓ Magnetic Shielding	✓ Traditional ✓ Deep Learning	SUS 304 (3mm Thinckness)	40 kV, 8 mA (320 W)	✓ -10 - 40 °C ✓ AC IP55

MACADAMIA KERNEL PROCESSING LINE

ULTIMATE SOLUTION

Our complete macadamia kernel processing line delivers a smarter and more efficient solution from pre-sorting and cracking to shell and kernel separation, color sorting, and final grading. With every stage integrated into one complete system, it ensures a smooth workflow, reliable performance, and higher efficiency throughout the entire process.

By replacing multiple standalone machines from different suppliers, this solution helps reduce investment cost, equipment quantity, floor space, and the time spent on sourcing and integration. More than just equipment, it is a flexible solution that can be customized with different modules to match different production needs.



SPECIFICATIONS

5 T / DAY

Kernel Capacity Per Standard Line

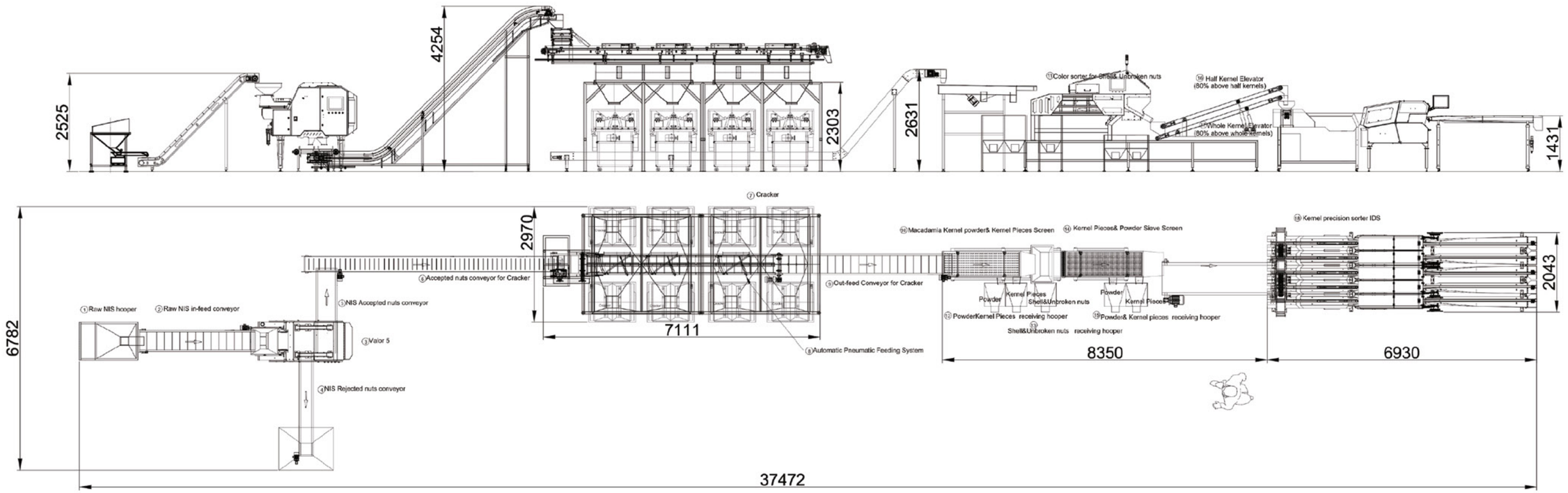

* Customizable To Different Capacity Requirements

X-ray Imaging Sorter	Craker	Vibration Screen	QMAX	IDS
1	8	2	1	5

X-ray Imaging Sorter	Craker	QMAX	IDS
2 - 7 t / h	150 - 300 kg / h	2 -10 t / h	100 - 150 kg / h

GLOBAL FOOTPRINT

Our sorting machines are widely used in major nut-producing regions across China, Vietnam, Australia, Kenya, South Africa, Malawi, Zimbabwe, Zambia and the United States giving the company about 60% market share and long-term partnerships with leading nut and agricultural companies

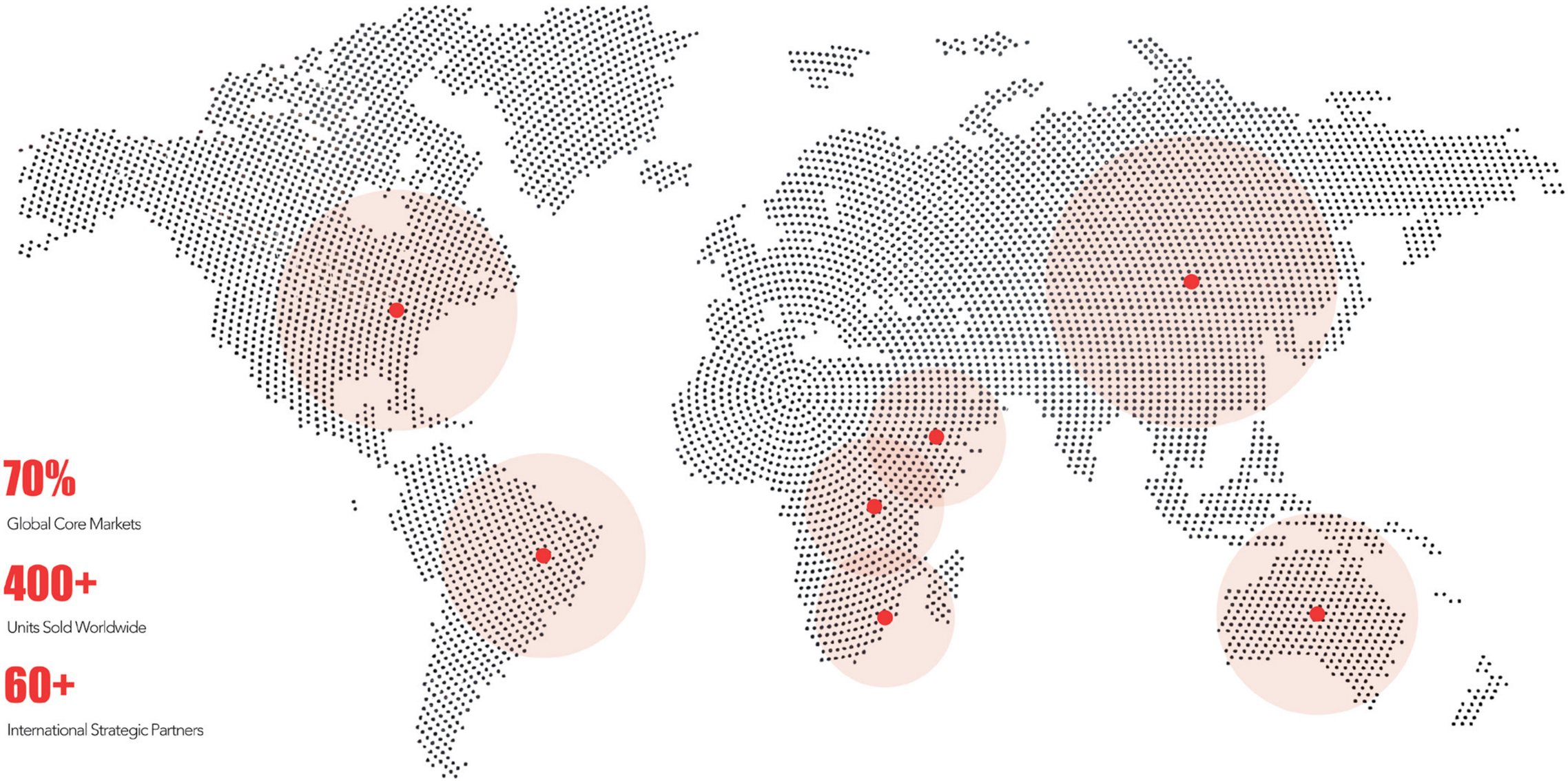

70%

Global Core Markets

400+

Units Sold Worldwide

60+

International Strategic Partners

IRSQUARE

GLOBAL PARTNERS

INC international Nut&DriedFruit

GLOBAL MACADAMIA CO.

好想你

迪恩坚果

ShineN

ALLOWAY MACADAMIA

名洋食品 MINGYANGSHIPIN

CL MACS

SWISS GOURMET HOUSE

Umbhaba Bananas

Golden Macadamias

Rainbow 天虹牌

MFM

freedom fresh australia SINCE 1958

QueenNut MACADAMIA

DANROC Growing the Future

果云阁 GUOYUNGE

kenya nut company

求是坚果

龙泰食品

nutworks

云核 YUNNAN WALNUT

百草味 Be & Cheery

义忠仁

乡村产业集团 XIANG CUN CHAN YE JI TUAN

澳盛坚果王

Summerland FARM BALLINA-BYRON HINTERLAND

MACADAMIAS DIRECT

里仁美

三只松鼠

东源果丰